PRECISION ACOUSTICS

PVdF student kit

The PVdF student kit comprises 3 pieces of uniaxially poled PVdF each with electrodes of 250 nm Gold on top of 40 nm Chrome. There will be some small scale variation in poling and therefore all data is an indication of properties and cannot be guaranteed.

Quarter and half wave thickness resonance frequencies for PVDF film can be deduced from the acoustic velocity and the thickness of the film. The student kit contains 1 piece of each 110 µm, 52 µm and 28 µm each 5 cms by 5 cms.

Precision Acoustics Ltd Hampton Farm Business Park, Higher Bockhampton, Dorchester, Dorset DT2 8QH, UK

t. +44 (0) 1305 264669 **e.** office@acoustics.co.uk **w.** acoustics.co.uk

BASIC INFORMATION

Longitudinal wave speed	2260 m/s
Shear wave speed	1085 m/s
Density	1780 kg/m^3
Melting temperature	175 – 180 °C
Curie temperature	205 °C
Maximum usable temperature	70 – 80 °C
Coercive field strength	50 – 80 MV/m
Breakdown field strength	200 MV/m
Relative di-electric constant	10 – 12
Piezoelectric charge coefficients	
d_{31}	22 pC/N
d_{32}	3 pC/N
d_{33}	-30 pC/N

GENERAL USAGE INFORMATION

PVdF is pre-shrunk prior to the deposition of electrodes and further "shrinking" is not required

To bond PVdF to a substrate use a low viscosity epoxy or nitrile contact adhesive. In either case make sure sufficient pressure is applied during cure. Cyanoacrylate adhesives should be used with care since although they will bond to PVDF, they will degrade in contact with water.

PVdF can be cut to shape using a sharp scalpel. A blunt edge will result in hair-like filaments of PVdF crossing from one surface of the film to the other. These filaments will have electrode coating on them and will therefore result in the shorting of the two electrodes and failure of the piezoelectric device

ATTACHING ELECTRODES

Electrodes can be attached to PVdF in one of two ways: conductive adhesive or mechanical contact. Soldering to PVdF film is NOT an option for two reasons:

- The heat of the soldering iron is likely to melt the film
- Long before it melts the film the heat will have caused permanent and irreversible damage to the piezo-electric nature of the film. Exposure to temperatures above 80 °C will start to irreversibly degrade the performance of PVdF.

Methods of making a connection to the metallised PVdF are now discussed in more detail.

Conductive Adhesive

There are a wide range of commercially available conductive adhesives, most of which are based upon an epoxy that has been loaded with conductive particulates, with the intention of getting a continuous electrical pathway across adjacent, touching, particulates. Often these adhesives are very heavily loaded with either silver or carbon powders, leading to very low resistances when cured. Unfortunately, the adhesive strength of these products is often poor. However the chemical company Henkel make a range of very good conductive adhesives that both bond well and have low

resistance; particular recommendations are Henkel Loctite Abelstik 56C and 64C (also known as Hysol Eccobond 56C and 64C) for silver and carbon loaded epoxies respectively.

An alternative solution is to form a temporary bond between wire and PVdF film with a cyanoacrylate (Superglue) adhesive and then use silver loaded paint over the ends of the wire on the film to make an electrical connection. Once the paint is dry, check the connection with a resistance meter and then re-enforce the connection by applying a small quantity of standard two part clear non-conductive epoxy over the connection.

Mechanical bonding

The other major means of obtaining an electrical contact to PVdF film is to bring the film and the end of the electrode wire into contact and maintaining them there with some form of pressure. This could be accomplished by clamping or crimping an electrode onto the film, or by a lip arrangement as shown in Figure 1. In this particular example the mechanical contact is established between the Metal Casing and the Electrode on the surface of the PVdF sample. The Backing Slug is then pressed onto the rear surface of the PVdF ensuring it is in contact with the metal casing and once in place the backing slug can be fixed in place by means of a quick setting adhesive.

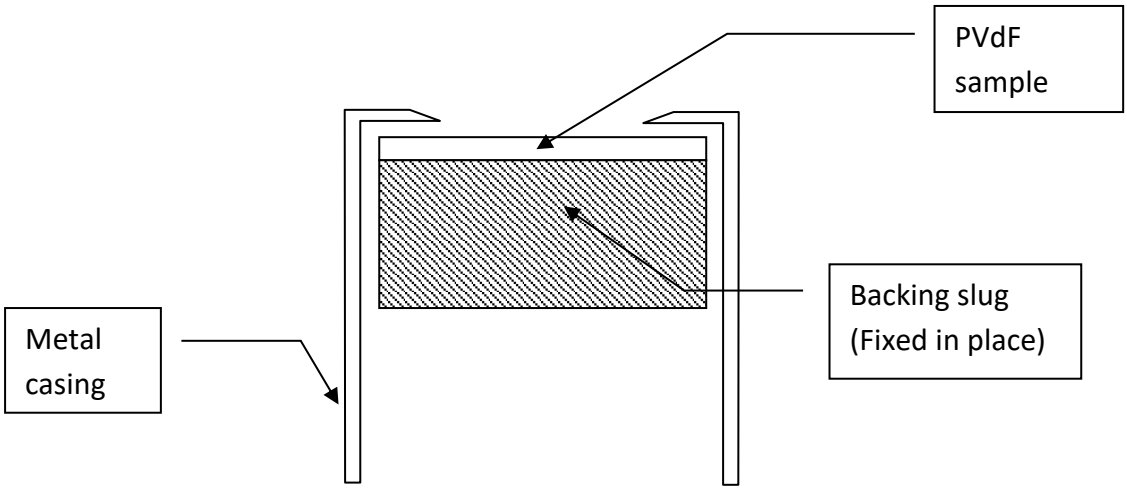

Figure 1 - Mechanical fixing of a PVdF active element

All information is based on results gained from experience and tests, and is believed to be accurate but is given without acceptance of liability for loss or damage attributable to reliance thereon as conditions of use lie outside the control of Precision Acoustics Ltd.